Stepper motor| 85mm 2 phase hybrid stepper motor

Step Angle	----	1.8°
Step Angle Accuracy	----	±5%(full step, no load)
Resistance Accuracy	----	±10%
Inductance Accuracy	----	±20%
Insulation Resistance	----	500VDC 100MΩMin
Dielectric Strength	----	500VAC 1 minute
Ambient Temperature	----	-20℃-- +50℃
Temperature Rise	----	80℃ Max(rated current)
Shaft Axial Play	----	0.08mm Max(450g load)
Shaft Radial Play	----	0.02mm Max(450g load)
Max Axial Force	----	80N
Max Radial Force	----	220N(20mm from the flange)
Insulation Class	----	B

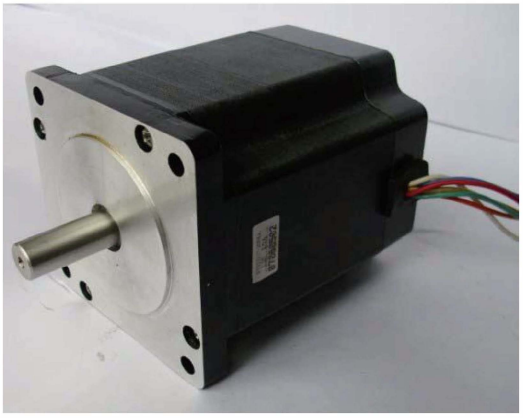

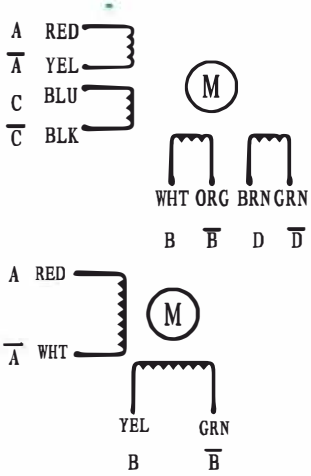

* Specifications

Model	Motor Codes	Voltage /Phase	Current /Phase	Resistance /Phase	Inductance /Phase	Holding Torque	NO. of Leads	Rotor Inertia	Weight	Detent Torque	Length
Units		V	A	Ω	mH	N.m		g.cm²	Kg	Kg-cm	mm
SY85STH65-5904A	110065000	1.65	5.9	0.28	1.7	3.4	4	1000	1.8	0.8	65
SY85STH65-2808A	110065001	3.92	2.8	1.4	3.9	3.4	8				
SY85STH80-5504A	110080000	2.53	5.5	0.46	4	4.6	4	1400	2.4	1.2	80
SY85STH80-4208A	110080001	3.18	4.2	0.75	3.4	4.6	8				
SY85STH118-6004A	110118000	3.6	6.0	0.6	6.5	8.7	4	2700	3.8	2.4	118
SY85STH118-4208A	110118001	3.78	4.2	0.9	6.0	8.7	8				
SY85STH156-6204A	110156000	4.65	6.2	0.75	9.0	12.2	4	4000	5.4	0.36	156
SY85STH156-4208A	110156001	5.25	4.2	1.25	8.0	12.2	8				

* Dimension

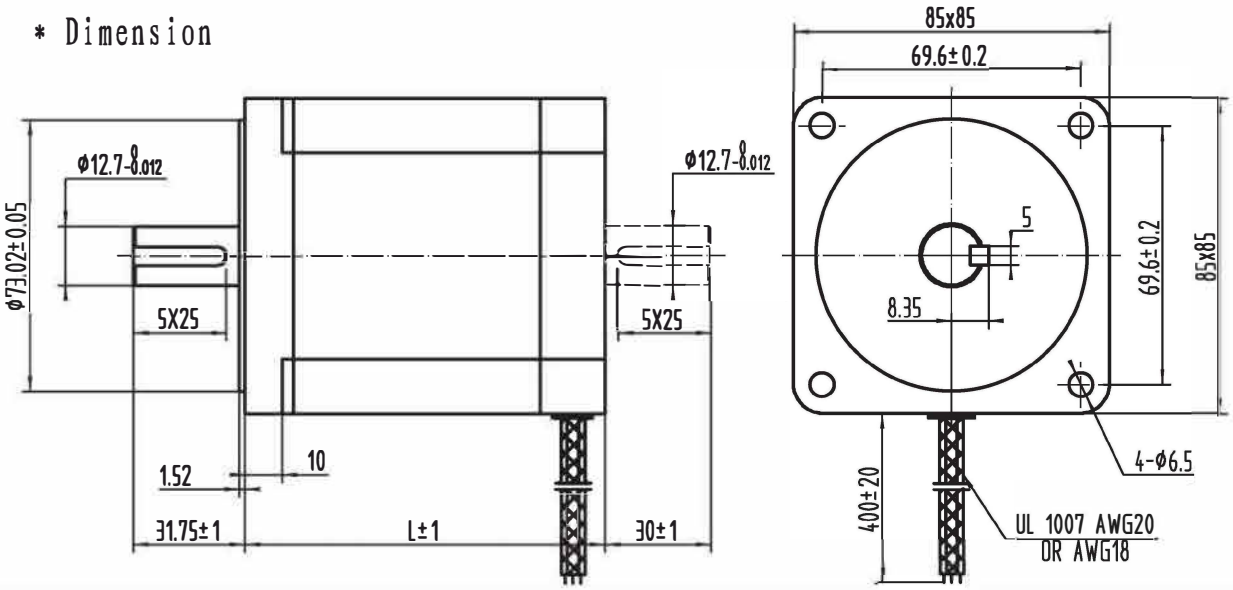

Stepper motor| 85mm 2 phase hybrid stepper motor

SY85STH80-5504A/4208A

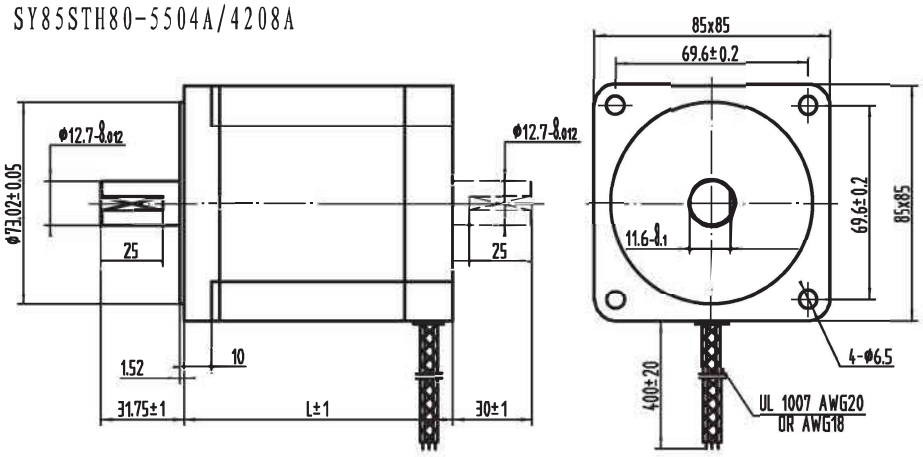

SY85STH118-6004A/4208A

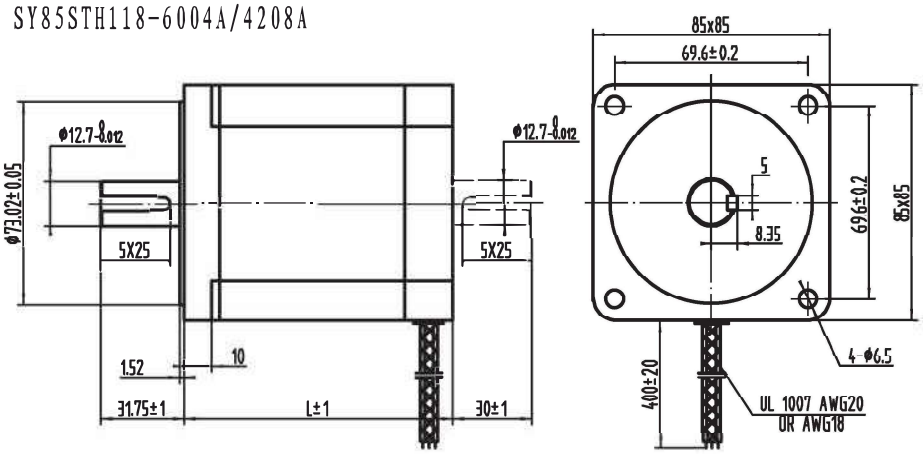

SY85STH156-6204A/4208A

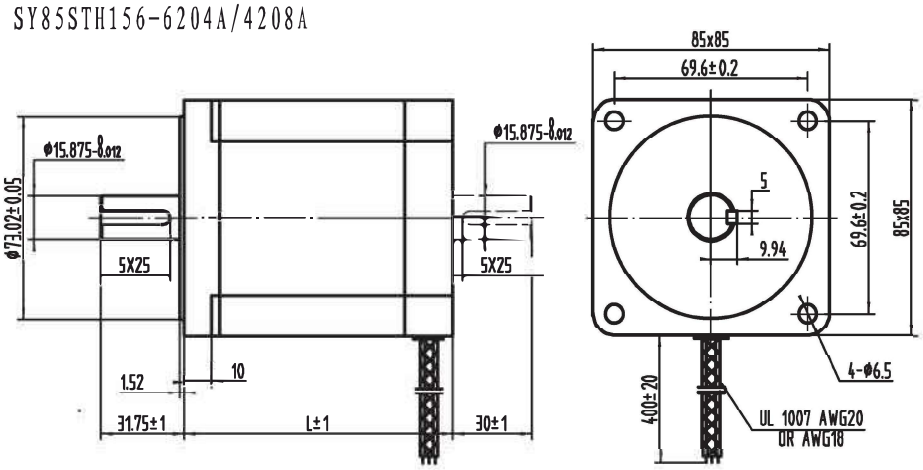

- Pull out torque curve:

SY85STH65-5904A Pull out torque curve:
VOLTAGE: 110VAC, CONSTANT CURRENT: 5.9A, HALF STEP

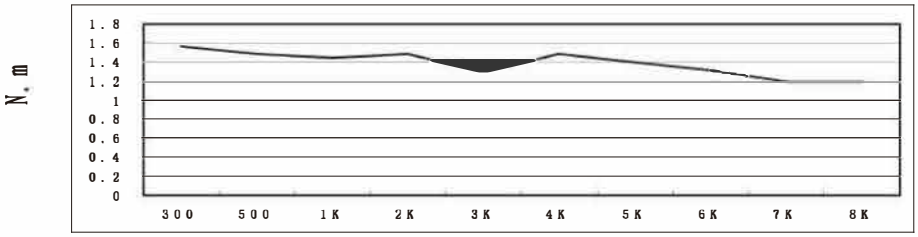

SY85STH65-2808A Pull out torque curve:
VOLTAGE: 110VAC, CONSTANT CURRENT: 2.8A, HALF STEP

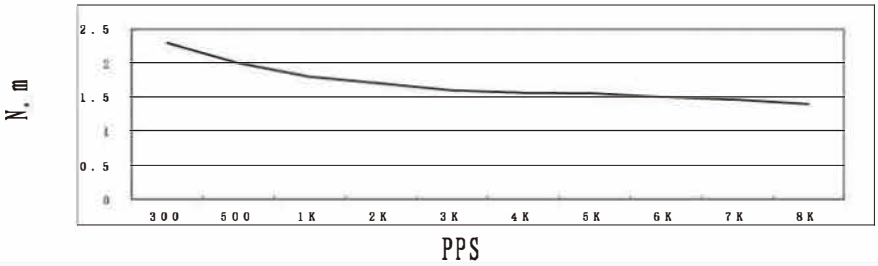

SY85STH80-5504A Pull out torque curve:
VOLTAGE: 110VAC, CONSTANT CURRENT: 5.5A, HALF STEP

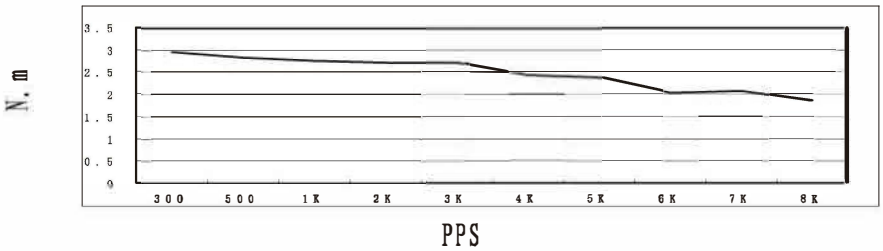

SY85STH80-4208A Pull out torque curve:
VOLTAGE: 110VAC, CONSTANT CURRENT: 2.8A, HALF STEP

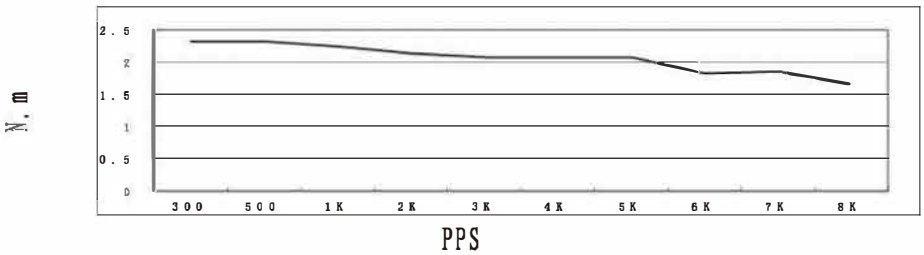

Stepper motor| 85mm 2 phase hybrid stepper motor

- Pull out torque curve:

SY85STH118-6004A Pull out torque curve:
VOLTAGE: 110VAC, CONSTANT CURRENT: 6.0A, HALF STEP

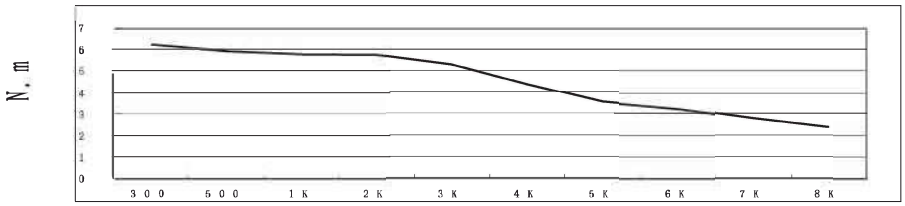

SY85STH118-4208A Pull out torque curve:
VOLTAGE: 110VAC, CONSTANT CURRENT: 4.2A, HALF STEP

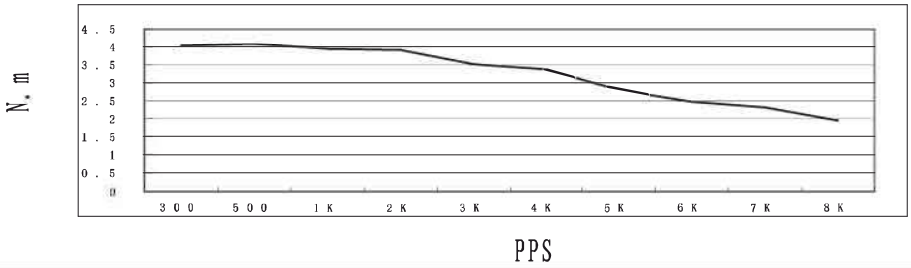

SY85STH156-6204A Pull out torque curve:
VOLTAGE: 110VAC, CONSTANT CURRENT: 6.2A, HALF STEP

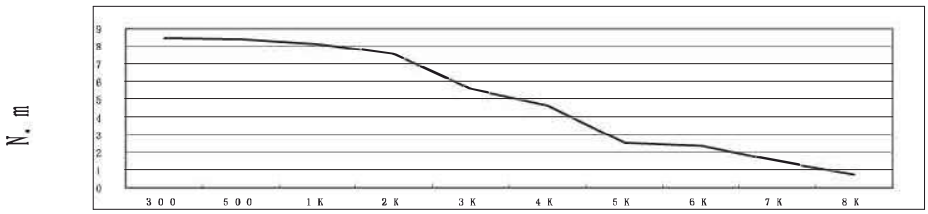

SY85STH156-4208A Pull out torque curve:
VOLTAGE: 110VAC, CONSTANT CURRENT: 4.2A, HALF STEP

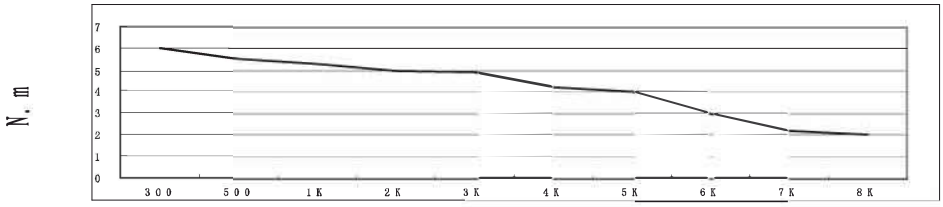

Stepper motor | 85 mm 3 phase hybrid stepper motor

Step Angle	----	1.2°
Step Angle Accuracy	----	±5% (full step, no load)
Resistance Accuracy	----	±10%
Inductance Accuracy	----	±20%
Insulation Resistance	----	500VDC 100MΩMin
Dielectric Strength	----	500VAC 1 minute
Ambient Temperature	----	-20℃-- +50℃
Temperature Rise	----	80℃ Max(rated current)
Shaft Axial Play	----	0.08mm Max(450g load)
Shaft Radial Play	----	0.02mm Max(450g load)
Max Axial Force	----	80N
Max Radial Force	----	220N(20mm from the flange)
Insulation Class	----	B

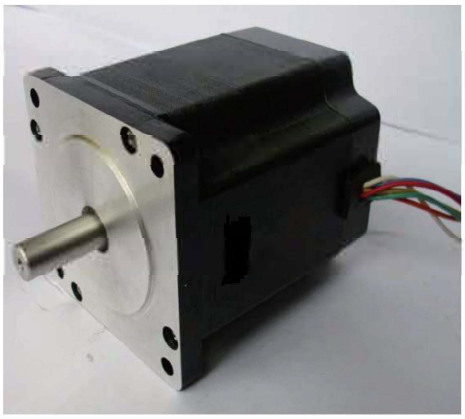

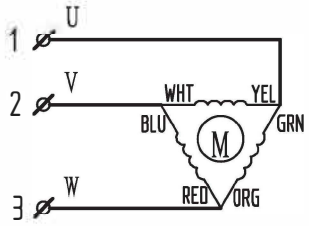

* Specifications

Model	Motor Codes	Voltage /Phase	Current /Phase	Resistance /Phase	Inductance /Phase	Holding Torque	NO. of Leads	Rotor Inertia	Weight	Detent Torque	Length
Units		V	A	Ω	mH	N.m		g.cm²	Kg	Kg-cm	mm
SY853P67-1756A	120067000	7.44	1.75	4.25	12.3	2.26	6	1100	1.9	1.0	67
SY853P97-2006A	120097000	10.8	2.0	5.4	23	4.52	6	1400	3.1	2.0	97
SY853P97-5806A	120097001	5.22	5.8	0.9	3.2		6				
SY853P97-5206A	120097002	5.72	5.2	1.1	6.8		6				
SY853P127-2256A	120127000	20.25	2.25	9.0	41	6.78	6	2700	4.3	3.0	127
SY853P127-5206A	120127001	14.3	5.2	2.75	13.7		6				

* Dimension

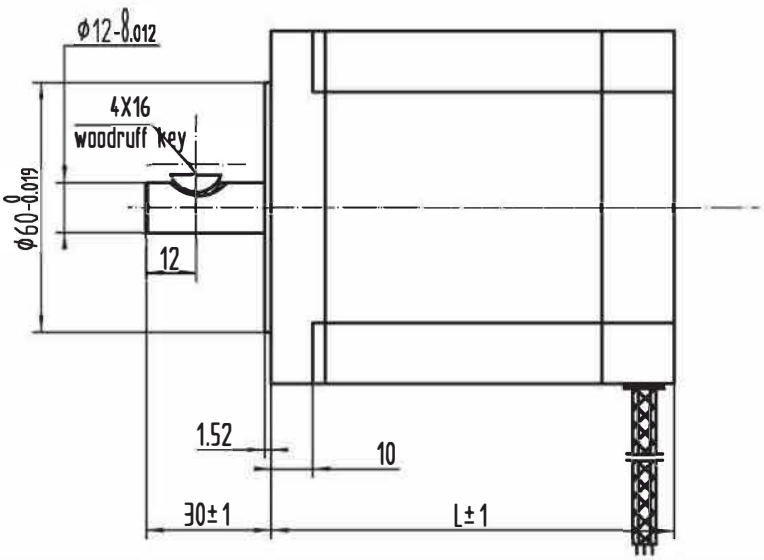

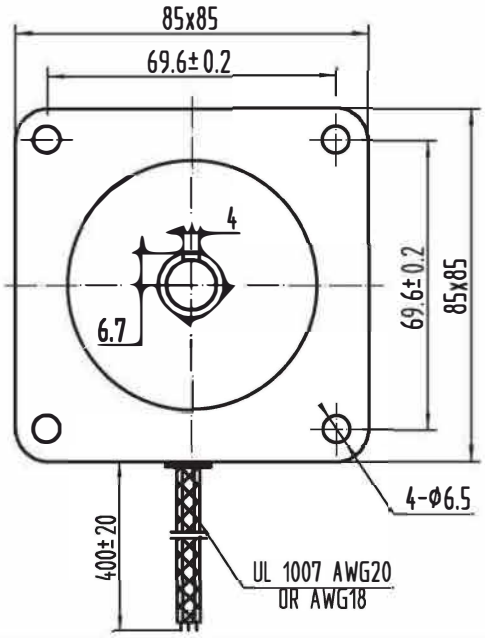

- Pull out torque curve:

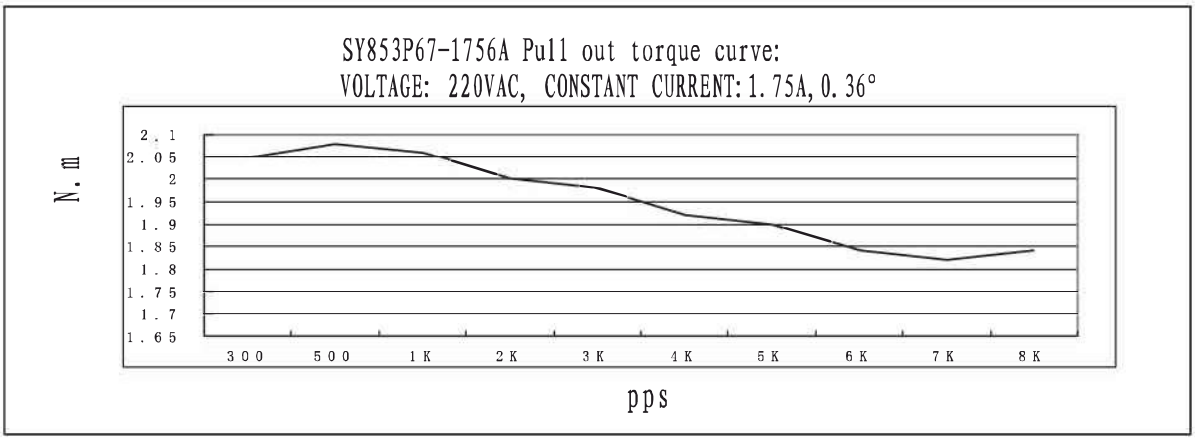

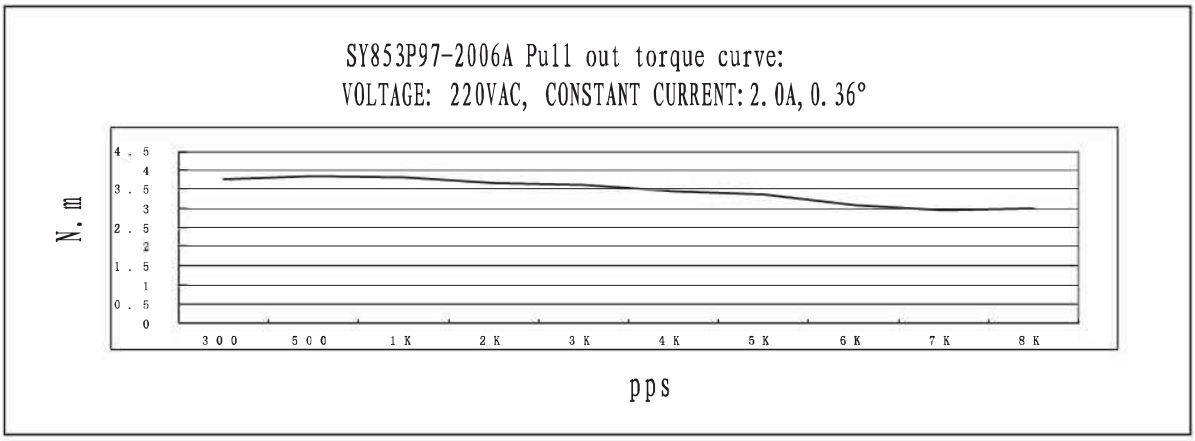

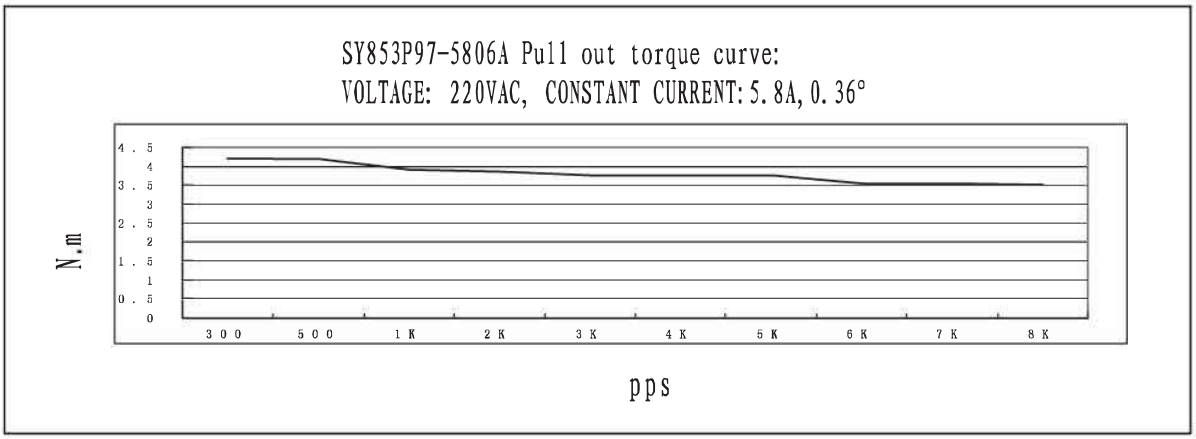
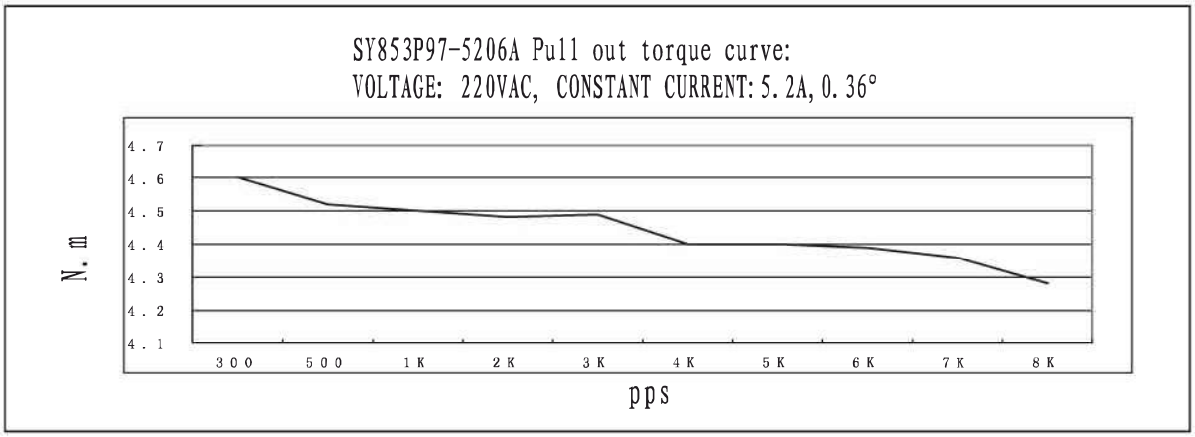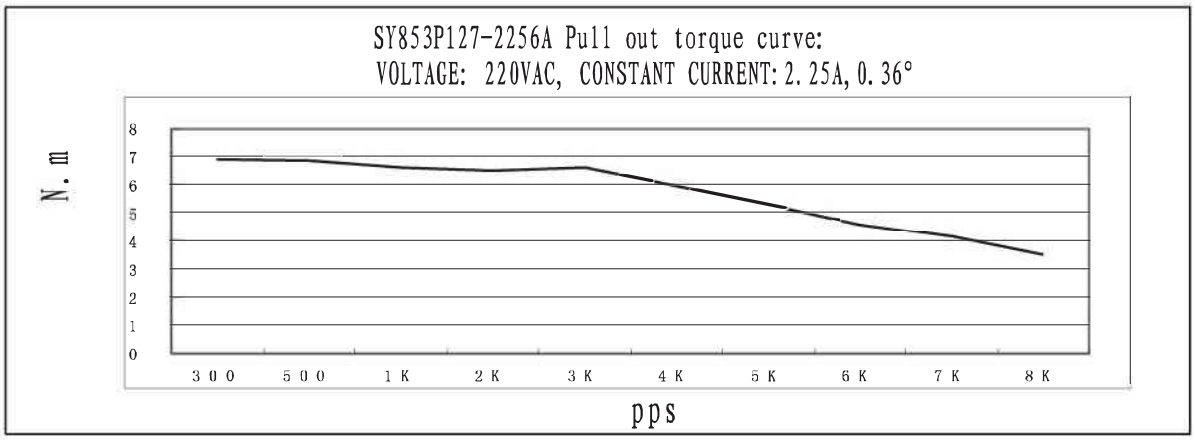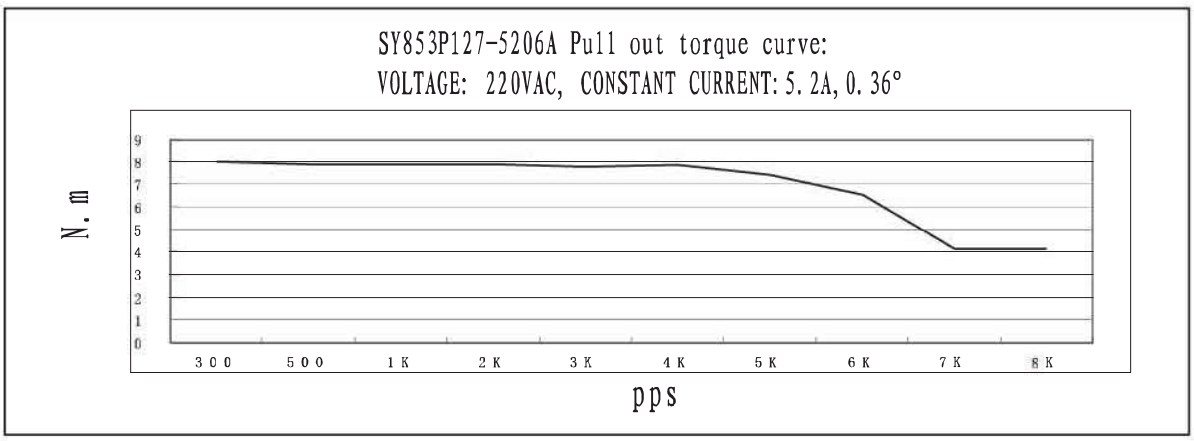
- Pull out torque curve: